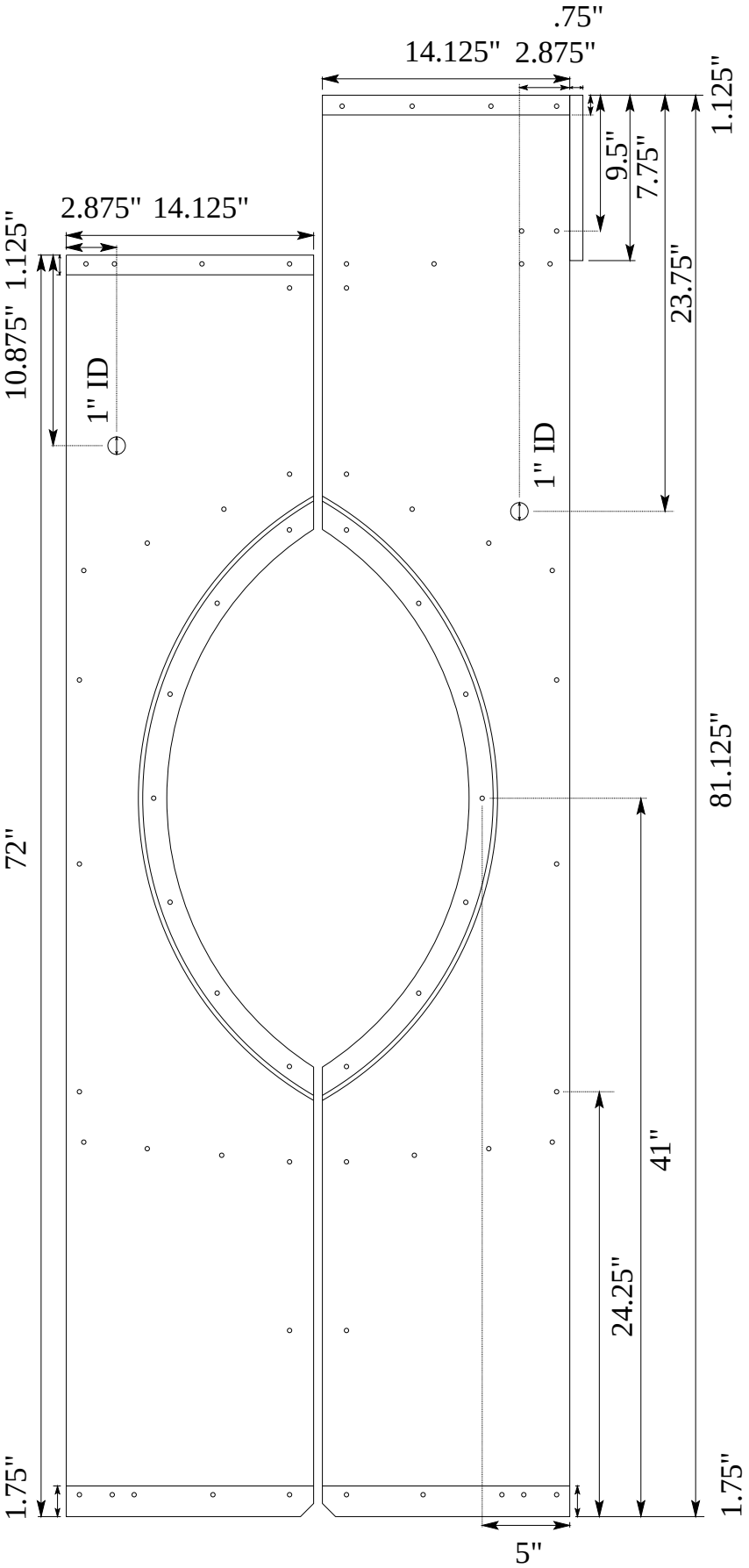


1. All holes are 5/16".
2. The rear bottom ends are chamfered to allow insertion and clearance for a weld nut.